UCB SERIES

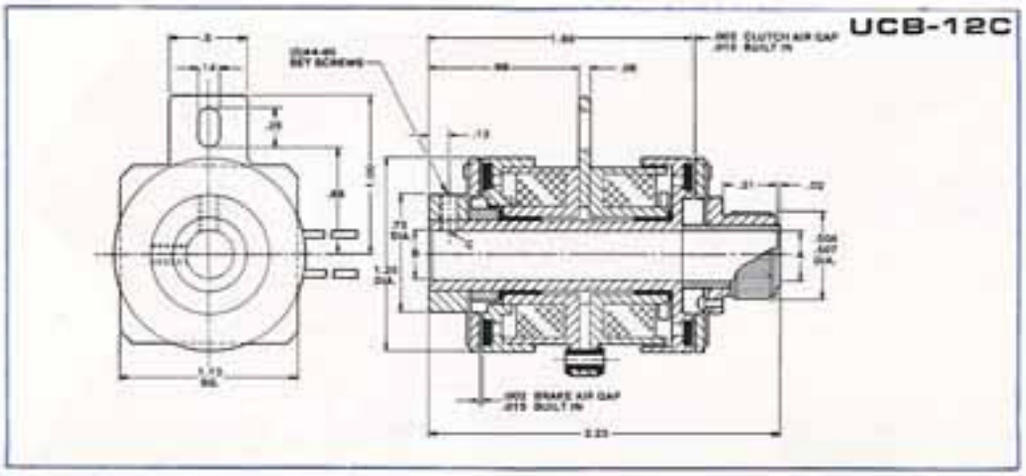

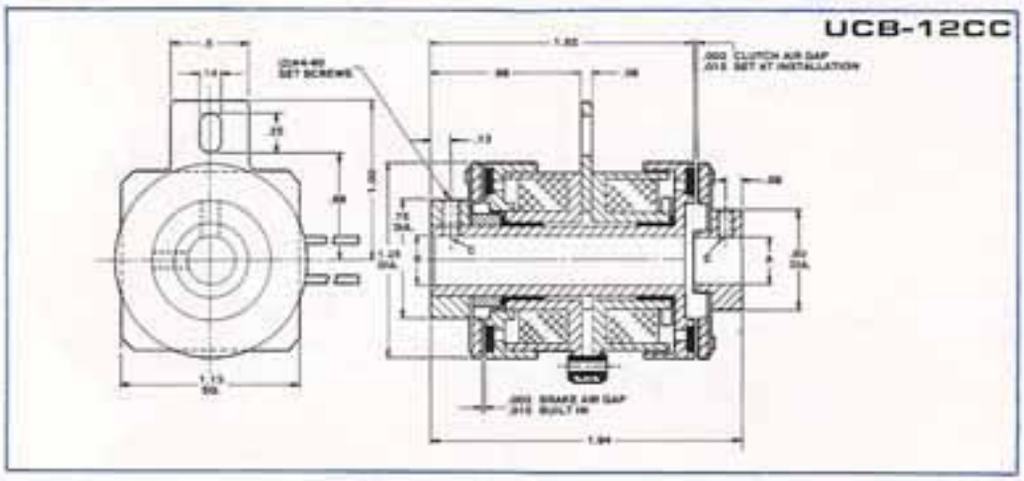

MODEL NO.	A	B	C
UCB-12C-4	.250 .251	.250 .251	#4-40 SET SCREW
UCB-12C-5	.3125 .3135	.3125 .3135	#4-40 SET SCREW

UCB-12C NOTES:

Rotor hub is secured to shaft by set screw (see C).
Customer part to have $^{.502}_{.498}$ Dia. press fit over straight knurl.

MODEL NO.	A	B	C
UCB-12CC-4	.250 .251	.250 .251	#4-40 SET SCREW
UCB-12CC-5	.3125 .3135	.3125 .3135	#4-40 SET SCREW

UCB-12CC NOTES:

Rotor hub is secured to shaft by set screw (see C).
Armature is secured to shaft by set screw (see C).

CUSTOMER SHALL MAINTAIN:

Loose pin connection into anti-rotation tabs so as not to pre-load bearings.

TECHNICAL DATA

MECHANICAL							ELECTRICAL		
MODEL NO.	RATED STATIC TORQUE (IN-LB)		WEIGHT (OZ.)	RESPONSE TIME (MSEC)	LIFE AT RATED TORQUE (MEGACYCLES)	MAXIMUM RATED SPEED (RPM)	COIL NO.	RATED VOLTAGE (VDC)	CURRENT (AMPS)
	CLUTCH	BRAKE							
UCB-12C	5	5	4.4	22	4	2000	1	90	.043
							2	24/28	.216
							3	12	.400
							4	6	.800
UCB-12CC	5	5	4.5	22	4	2000	1	90	.043
							2	24/28	.216
							3	12	.400
							4	6	.800

CALL ELECTROID • 973-467-8100

UCB SERIES

UCB-17C

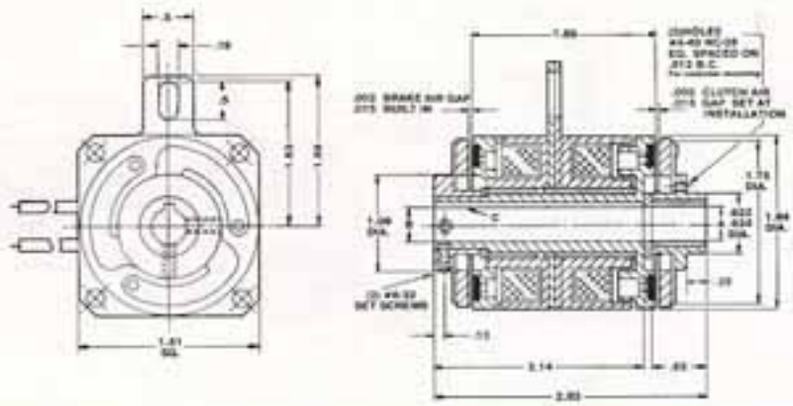

UCB-17CC

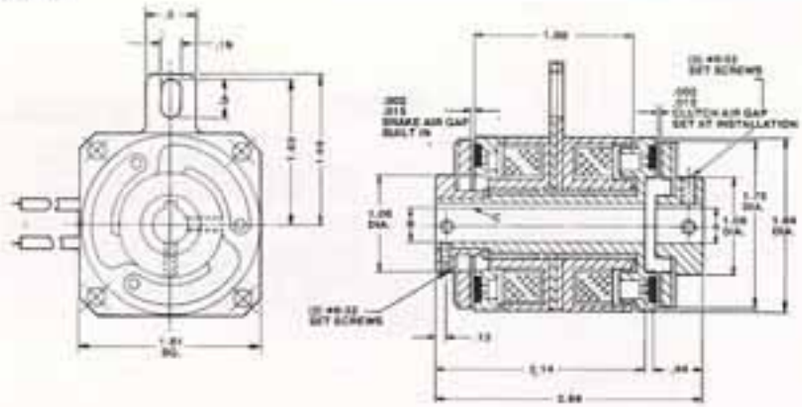

MODEL NO.	A	B	C
UCB-17C-4	.250 .251	.250 .251	1/16 X 1/32
UCB-17C-5	.3125 .3135	.3125 .3135	1/16 X 1/32
UCB-17C-6	.375 .376	.375 .376	3/32 X 3/64

MODEL NO.	A	B	C
UCB-17CC-4	.250 .251	.250 .251	1/16 X 1/32
UCB-17CC-5	.3125 .3135	.3125 .3135	1/16 X 1/32
UCB-17CC-6	.375 .376	.375 .376	3/32 X 3/64

UCB-17C-17CC NOTES:

Rotor hub is secured to shaft by set screw and key.
Armature is secured to shaft by set screw and key.

CUSTOMER SHALL MAINTAIN:

Loose pin connection into anti-rotation tab so as not to pre-load bearings.

TECHNICAL DATA

MECHANICAL							ELECTRICAL		
MODEL NO.	RATED STATIC TORQUE (IN-LB)		WEIGHT (LBS.)	RESPONSE TIME (MSEC)	LIFE AT RATED TORQUE (MEGACYCLES)	MAXIMUM RATED SPEED (RPM)	COIL NO.	RATED VOLTAGE (VDC)	CURRENT (AMPS)
	CLUTCH	BRAKE							
UCB-17C	15	15	.78	32	3	2000	1	90	.077
							2	24/28	.250
							3	12	.750
							4	6	1.20
UCB-17CC	15	15	.78	32	3	2000	1	90	.077
							2	24/28	.250
							3	12	.750
							4	6	1.20

UCB SERIES

UCB-26C

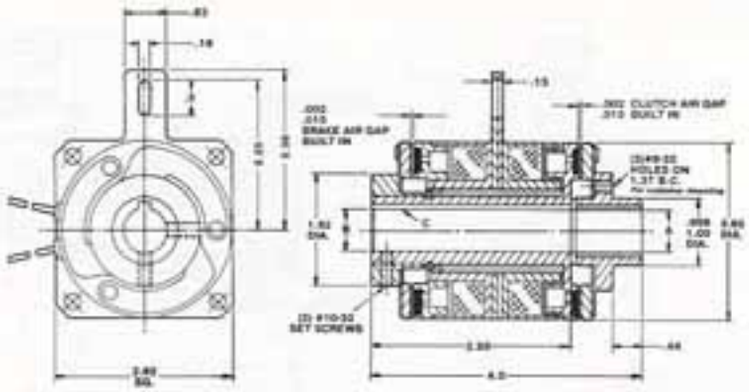

UCB-26CC

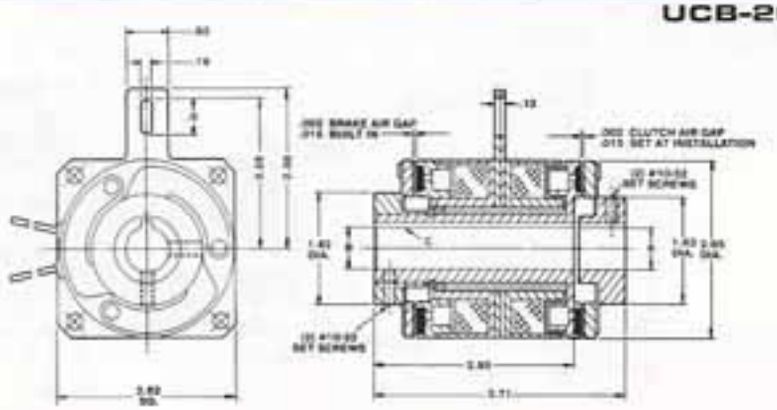

MODEL NO.	A	B	C
UCB-26C-8	.500 .501	.500 .501	1/16 x 1/8
UCB-26C-10	.625 .626	.625 .626	1/16 x 3/16

UCB-26C-26CC NOTES:

Rotor hub is secured to shaft by set screw (see C).

Special flat keyway is available upon request.

MODEL NO.	A	B	C
UCB-26CC-8-8	.500 .501	.500 .501	1/16 x 1/8
UCB-26CC-10-10	.625 .626	.625 .626	1/16 x 3/16

CUSTOMER SHALL MAINTAIN:

Loose pin connection into anti-rotation tab so as not to pre-load bearings.

Surface of pilot mounting to be square with shaft within .003 T.I.R. measured at 3.125 B.C.

Concentricity of field mounting pilot diameter with rotor mounting shaft within .005 T.I.R.

Squareness of field mounting face with shafts within .003 T.I.R.

Concentricity between shafts within .005 T.I.R.

TECHNICAL DATA

MECHANICAL							ELECTRICAL		
MODEL NO.	RATED STATIC TORQUE (IN-LB)		WEIGHT (LBS.)	RESPONSE TIME (MSEC)	LIFE AT RATED TORQUE (MEGACYCLES)	MAXIMUM RATED SPEED (RPM)	COIL NO.	RATED VOLTAGE (VDC)	CURRENT (AMPS)
	CLUTCH	BRAKE							
UCB-26C	60	60	3.0	42	3	3000	1	90	.09
							2	24/28	.290
							3	12	.680
							4	6	1.36
UCB-26CC	60	60	3.0	42	3	3000	1	90	.09
							2	24/28	.290
							3	12	.680
							4	6	1.36

UCB SERIES

UCB-42C

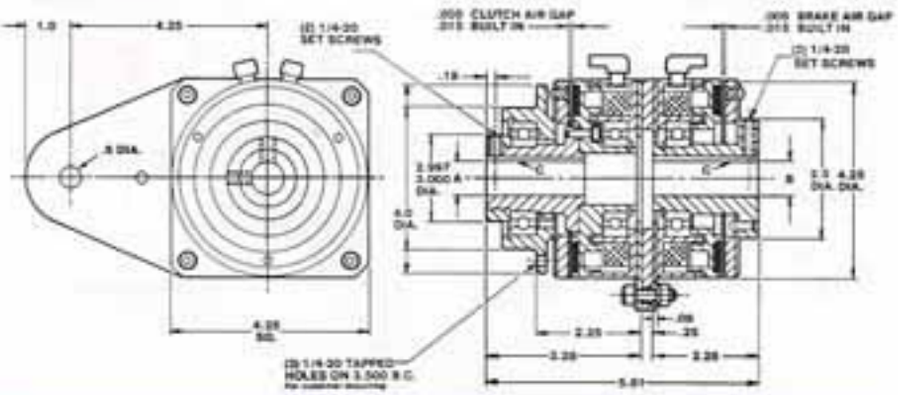

UCB-42CC

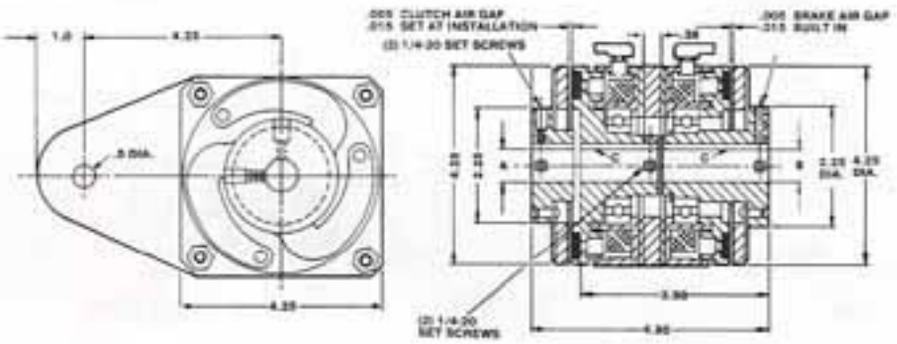

MODEL NO.	A	B	C
UCB-42C-12	.750 .751	.750 .751	3/16 x 3/32
UCB-42C-14	.875 .876	.875 .876	3/16 x 3/32
UCB-42C-16	1.000 1.001	1.000 1.001	1/4 x 1/8

MODEL NO.	A	B	C
UCB-42CC-8	.500 .501	.500 .501	1/8 x 1/16
UCB-42CC-10	.625 .626	.625 .626	3/16 x 3/32
UCB-42CC-12	.750 .751	.750 .751	3/16 x 3/32
UCB-42CC-14	.875 .876	.875 .876	3/16 x 3/32
UCB-42CC-16	1.000 1.001	1.000 1.001	1/4 x 1/8

TECHNICAL DATA

MECHANICAL							ELECTRICAL		
MODEL NO.	RATED STATIC TORQUE (IN.-LBS.) CLUTCH	RATED STATIC TORQUE (IN.-LBS.) BRAKE	WEIGHT (LBS.)	RESPONSE TIME (MSEC)	LIFE AT RATED TORQUE (MEGACYCLES)	MAXIMUM RATED SPEED (RPM)	COIL NO.	RATED VOLTAGE (VDC)	CURRENT (AMPS)
UCB-42C	240	240	10	90	3	3000	1	90	.12
							2	24/28	.46
							3	12	.92
							4	6	1.82
UCB-42CC	240	240	10	90	3	3000	1	90	.12
							2	24/28	.46
							3	12	.92
							4	6	1.82