ECA-08C

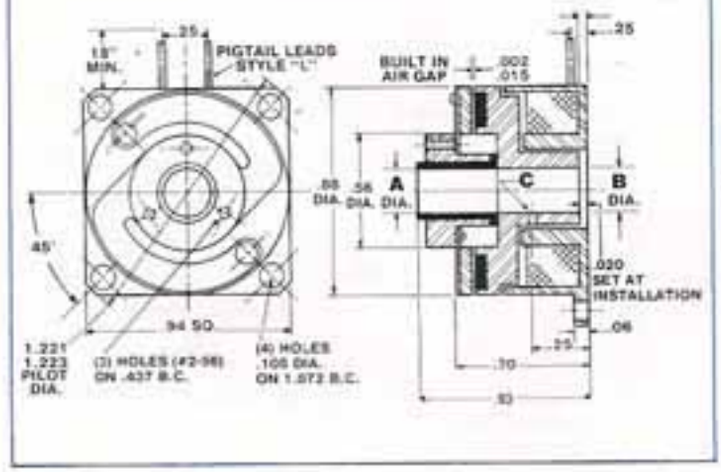

ECA-10C

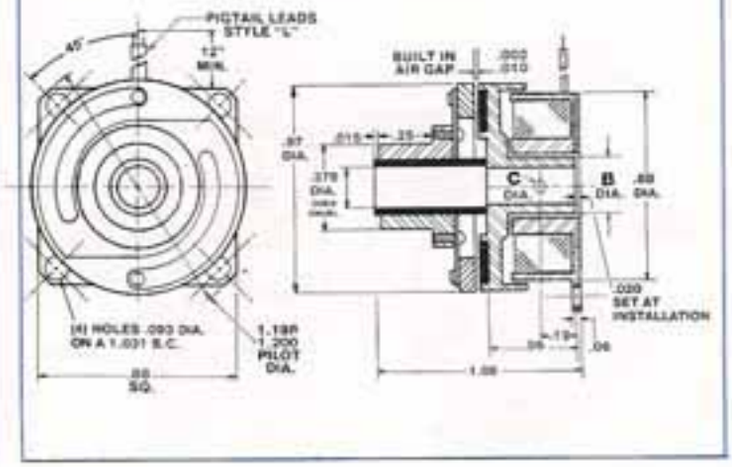

MODEL NO.	A	B	C
ECA-08C-3	.1875 .1885	.1875 .1885	.078

MODEL NO.	A	B	C
ECA-10C-3	.1875 .1885	.1875 .1885	.062
ECA-10C-4	.2505 .2515	.2505 .2515	.062

ECA-08C NOTE:

1. Rotor hub is secured to shaft by roll pin (see C).

ECA-10C NOTE:

1. Rotor hub is secured to shaft by roll pin (see C).

CUSTOMER SHALL MAINTAIN:

Concentricity of field mounting pilot with shaft within .002 T.I.R.

Squareness of stationary field mounting face with shaft within .002 T.I.R. measured at 1.072 B.C.

Axial dimensions $\frac{.015}{.020}$ to control proper clearances.

CUSTOMER SHALL MAINTAIN:

Concentricity of field mounting pilot with shaft within .002 T.I.R.

Squareness of stationary field mounting face with shaft within .002 T.I.R. measured at 1.031 B.C.

TECHNICAL DATA

MECHANICAL										ELECTRICAL		
		WEIGHT (OZ.)			INERTIA (LB-IN²)							
MODEL NO.	RATED STATIC TORQUE (IN-LB)	ARMATURE ASSEMBLY	ROTOR ASSEMBLY	FIELD ASSEMBLY	ARMATURE ASSEMBLY	ROTOR ASSEMBLY	RESPONSE TIME (MSEC)	LIFE AT RATED TORQUE (MILLION CYCLES)	MAXIMUM RATED SPEED (RPM)	COIL NO.	RATED VOLTAGE (VDC)	CURRENT (AMPS)
ECA-08C	1½	.28	.38	.77	.0014	.0021	10	5	10,000	1	90	.043
										2	24/28	.175
										3	12	.320
										4	6	.640
ECA-10C	1	.34	.46	.75	.00112	.00198	18	5	10,000	1	90	.042
										2	24/28	.136
										3	12	.315
										4	6	.630

ECA SERIES

ECA-11C

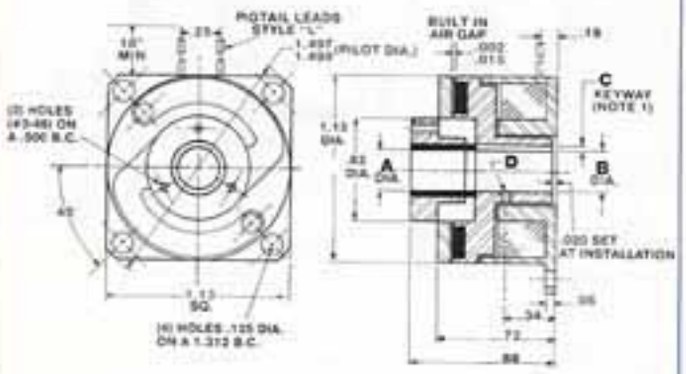

ECA-12C

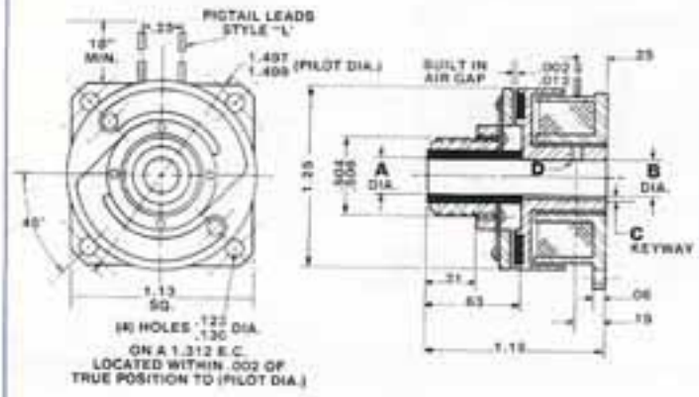

MODEL NO.	A	B	C	D
ECA-11C-3	.1875 .1880	.187 .188	NONE	#4-40 SET SCREW
ECA-11C-4	.250 .251	.250 .251	1/16 X 1/32	#4-40 SET SCREW

MODEL NO.	A	B	C	D
ECA-12C-4	.250 .251	.250 .251	1/16 X 1/32	.062 DIA.
ECA-12C-5	.3125 .3135	.3125 .3135	NONE	.062 DIA.

ECA-11C-12C NOTES:

1. Rotor hub is secured to shaft by set screw and woodruff key #201 (see C and D).
2. Square drive or splined armature hubs also available.

CUSTOMER SHALL MAINTAIN:

Concentricity of field mounting pilot with shaft within .002 T.I.R.

Squareness of stationary field mounting face with shaft within .003 T.I.R. measured at 1.312 B.C.

Axial dimensions $^{.010}_{.020}$ to control proper clearances.

TECHNICAL DATA

MECHANICAL										ELECTRICAL (APPLIES TO BOTH MODELS)		
		WEIGHT (OZ.)			INERTIA (LB-IN²)							
MODEL NO.	RATED STATIC TORQUE (IN-LB)	ARMATURE ASSEMBLY	ROTOR ASSEMBLY	FIELD ASSEMBLY	ARMATURE ASSEMBLY	ROTOR ASSEMBLY	RESPONSE TIME (MSEC)	LIFE AT RATED TORQUE (MILLION CYCLES)	MAXIMUM RATED SPEED (RPM)	COIL NO.	RATED VOLTAGE (VDC)	CURRENT (AMPS)
ECA-11C	2½	.46	.55	1.2	.0035	.0069	20	5	10,000	1	90	.050
										2	24/28	.160
ECA-12C	5	.61	.75	1.5	.004	.0076	22	5	10,000	3	12	.375
										4	6	.750

ECA SERIES

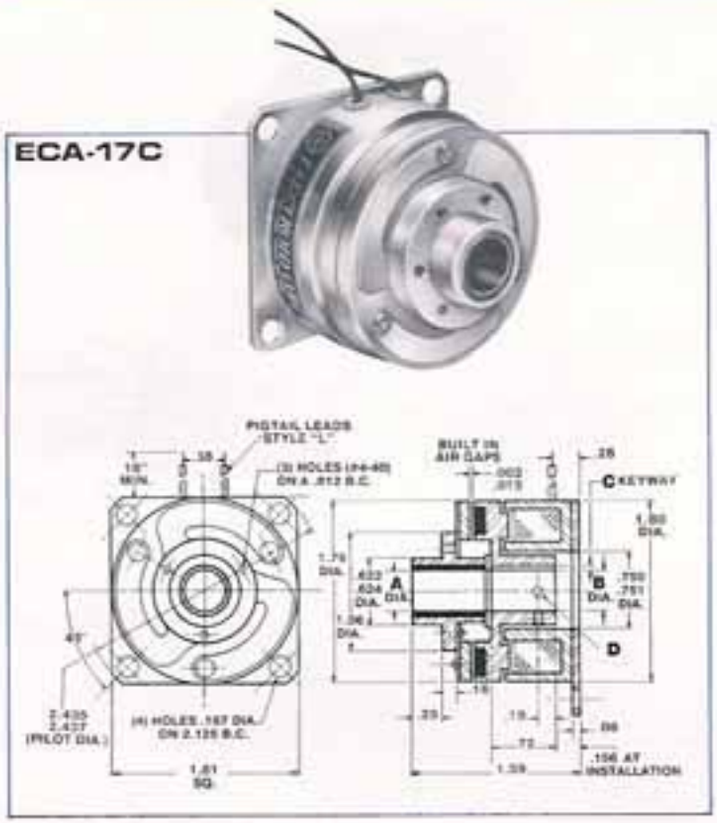

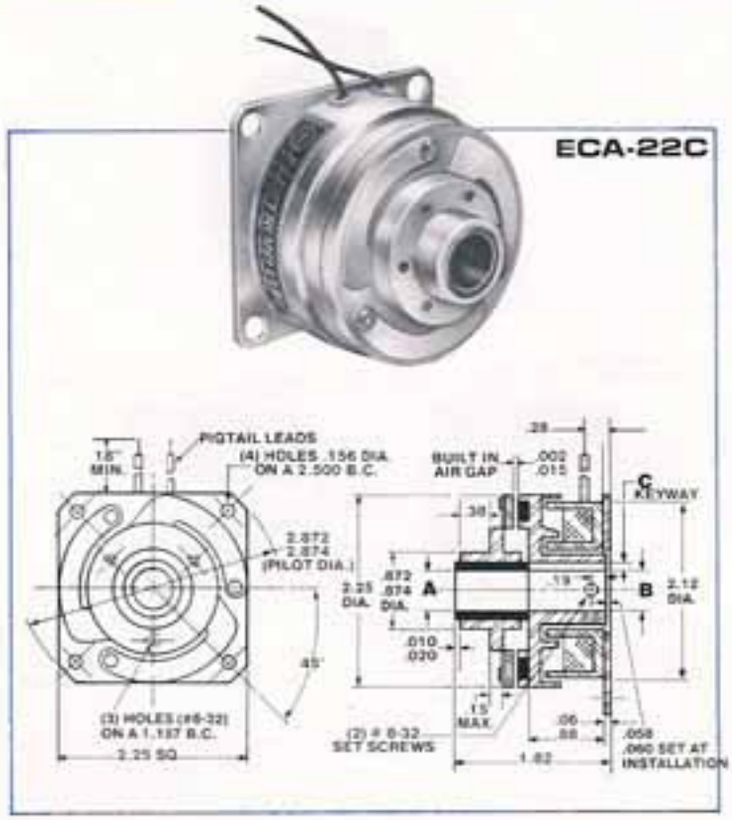

MODEL NO.	A	B	C	D
ECA-17C-4	.250 .251	.250 .251	1/32 X 1/16	#6-32 SET SCREW
ECA-17C-5	.3125 .3135	.312 .313	1/32 X 1/16	#6-32 SET SCREW
ECA-17C-6	.375 .376	.375 .376	3/64 X 3/32	#6-32 SET SCREW

MODEL NO.	A	B	C
ECA-22C-6	.375 .376	.375 .376	3/64 X 3/32
ECA-22C-8	.500 .501	.500 .501	1/16 X 1/8

ECA-17C NOTE:

1.Rotor hub is secured by (2) set screws and key (see C and D).

CUSTOMER SHALL MAINTAIN:

Field assembly pilot diameter to be concentric with shaft within .005 T.I.R.

Surface of pilot mounting to be square with shaft within .003 T.I.R. measured at 2.125 B.C.

ECA-22C NOTE:

1. Rotor is secured to shaft by (2) set screws and key (see C).

CUSTOMER SHALL MAINTAIN:

Concentricity of field mounting pilot diameter with rotor mounting shaft within .005 T.I.R.

Squareness of field mounting face with shaft .003 T.I.R.

TECHNICAL DATA

MECHANICAL										ELECTRICAL		
		WEIGHT (LBS.)			INERTIA (LB-IN²)							
MODEL NO.	RATED STATIC TORQUE (IN-LB)	ARMATURE ASSEMBLY	ROTOR ASSEMBLY	FIELD ASSEMBLY	ARMATURE ASSEMBLY	ROTOR ASSEMBLY	RESPONSE TIME (MSEC)	LIFE AT RATED TORQUE (MILLION CYCLES)	MAXIMUM RATED SPEED (RPM)	COIL NO.	RATED VOLTAGE (VDC)	CURRENT (AMPS)
ECA-17C	15	.117	.163	.248	.068	.0526	32	3	10,000	1	90	.077
										2	24/28	.250
										3	12	.582
										4	6	1.200
ECA-22C	35	.258	.250	.450	.199	.220	38	3	7,500	1	90	.090
										2	24/28	.253
										3	12	.568
										4	6	1.335

ECA SERIES

ECA-26C

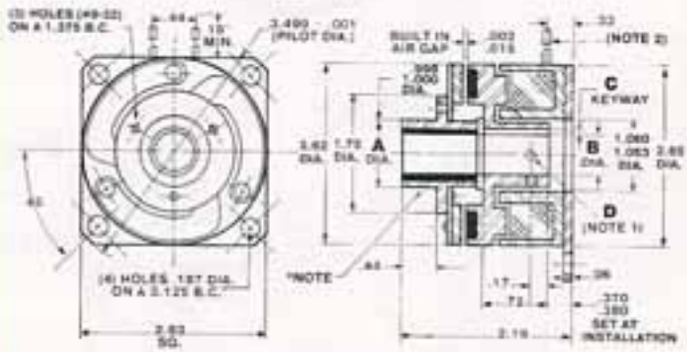

ECA-42C

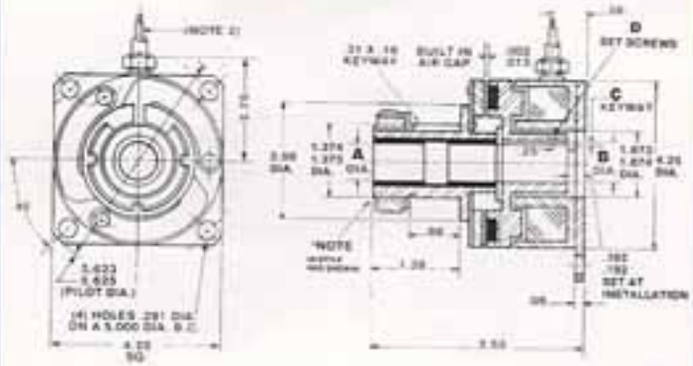

MODEL NO.	A	B	C	D
ECA-26C-6	.375 .376	.375 .376	3/64 X 3/32	#10-32 SET SCREW
ECA-26C-8	.500 .501	.500 .501	1/16 X 1/8	#10-32 SET SCREW
ECA-26C-10	.625 .626	.625 .626	1/16 X 3/16	#10-32 SET SCREW

MODEL NO.	A	B	C	D
ECA-42C-8	.500 .501	.500 .501	1/16 X 1/8	#¼-20 SET SCREW
ECA-42C-10	.625 .626	.625 .626	3/32 X 3/16	#¼-20 SET SCREW
ECA-42C-12	.750 .751	.750 .751	3/32 X 3/16	#¼-20 SET SCREW

ECA-26C NOTES:

1. Rotor hub is secured to shaft by (2) set screws and key (see C and D).
2. "L" Style shown. Terminal Style available. Provides female threads for #4-40 screw (screws and rubber insulator supplied). Specify "T" Style when ordering.

*"N" style hub optional. See power transmission options.

ECA-42C NOTES:

1. Rotor hub is secured by (2) set screws and key (see C and D).
2. "H" Style shown. Unit is available with Terminals (Style "T") or 18" Long Pigtail leads (Style "L") specify "H", "T" or "L" when ordering.

CUSTOMER SHALL MAINTAIN:

Concentricity of field mounting pilot diameter with rotor mounting shaft within .005 T.I.R.

Squareness of field mounting face with shaft .003 T.I.R.

TECHNICAL DATA

MECHANICAL										ELECTRICAL		
		WEIGHT (LBS.)			INERTIA (LB-IN²)							
MODEL NO.	RATED STATIC TORQUE (IN-LB)	ARMATURE ASSEMBLY	ROTOR ASSEMBLY	FIELD ASSEMBLY	ARMATURE ASSEMBLY	ROTOR ASSEMBLY	RESPONSE TIME (MSEC)	LIFE AT RATED TORQUE (MILLION CYCLES)	MAXIMUM RATED SPEED (RPM)	COIL NO.	RATED VOLTAGE (VDC)	CURRENT (AMPS)
ECA-26C	75	.40 1.00*	.24	1.00	.33 .63*	.40	42	3	7,500	1	90	.090
										2	24/28	.290
										3	12	.680
										4	6	1.360
ECA-42C	240	1.70	1.38	2.00	4.05	2.55	90	1½	5,000	1	90	.130
										2	24/28	.410
										3	12	.960
										4	6	1.920